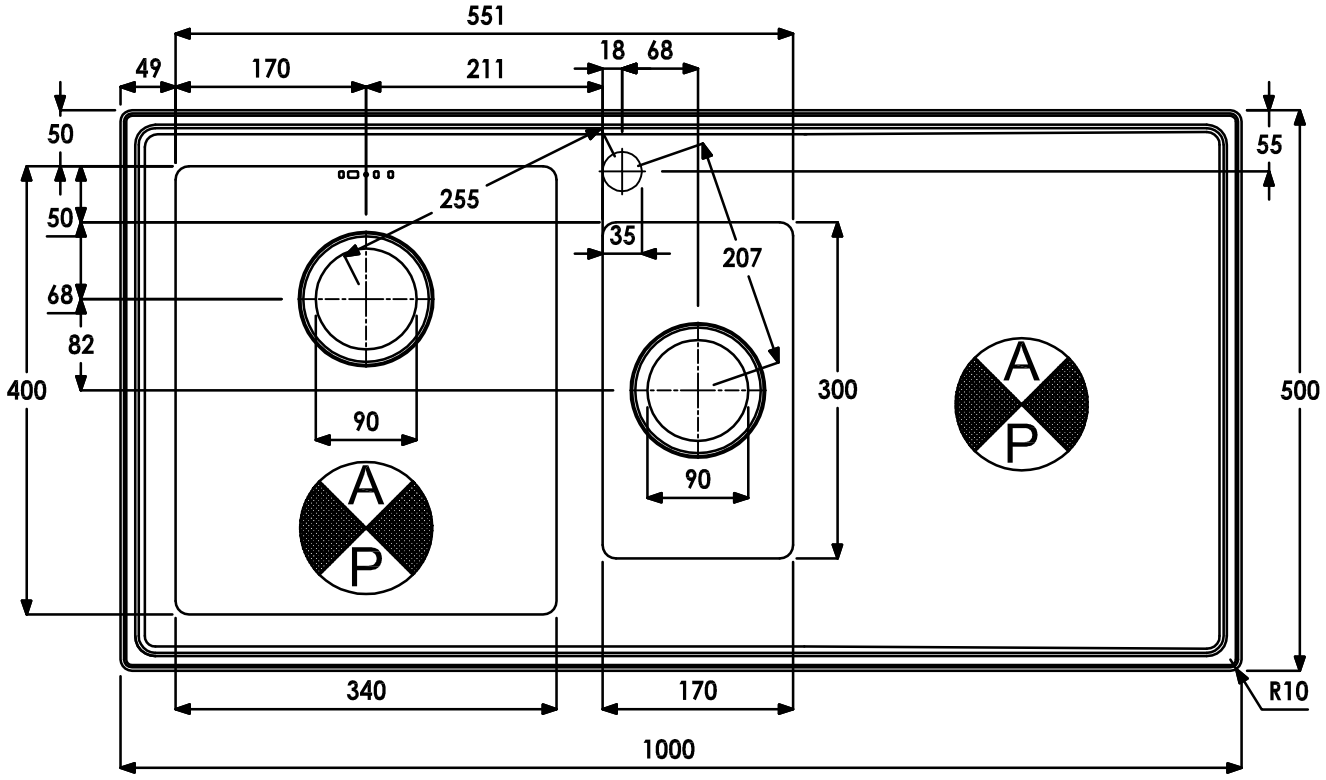

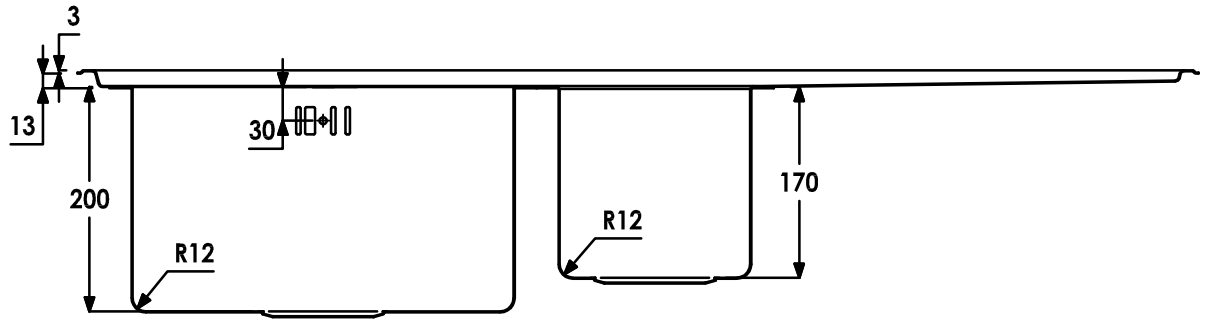
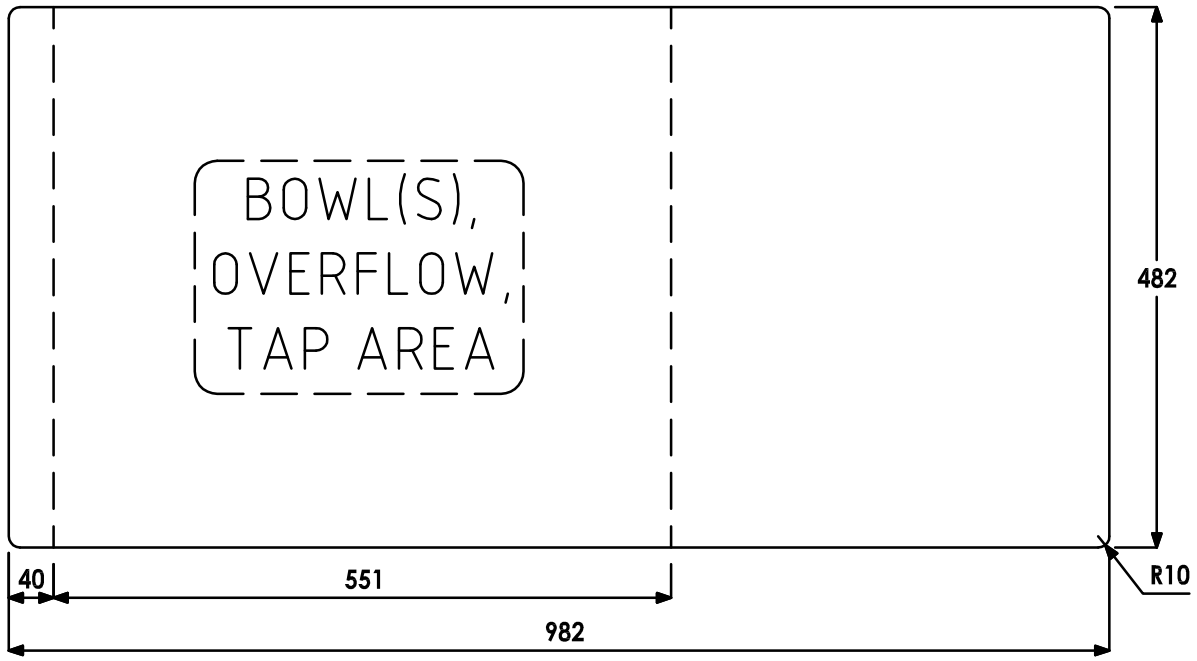
INSET CUT OUT