abode

Opulence
Basin Pillar Taps

Product features:

- Metal construction throughout
- Custom designed for lower range pressures
- Luscious European quality chromium plate finish
- Fixed spout to prevent accidental water damage
- Traditional European styling

Packaged properties:

Box length (mm): 255 **Box depth(mm):** 95

Box width(mm): 200 **Boxed weight (Kg):** 1.6

Includes pop up waste?: No

Additional comments:

Product dimensions:

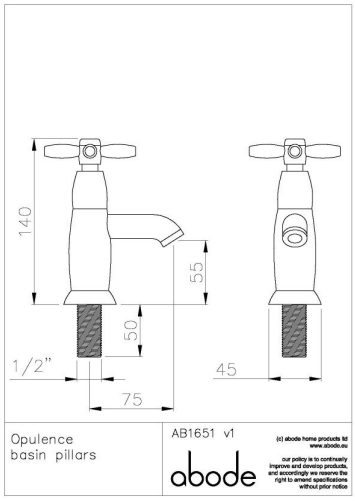

- **Product mounted where:** Surface
- **Recommended hole size:** 35 mm
- **Overall Height / projection:** 140 mm
- **Exit reach:** 75 mm
- **Exit height:** 55 mm
- **Base size:** 45 mm
- **Inlet centre distance(s):** n/a mm
- **Min. fitting depth required:** N/A mm
- **Max. surface depth:** 40 mm

Product flow characteristics:

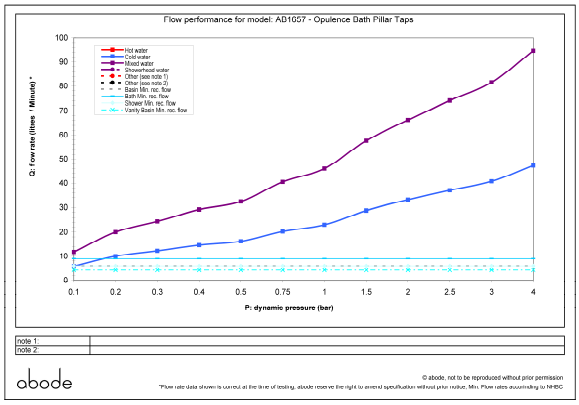

- **Min / Max water pressure (bar):** 0.10* / 5.5
- **Part G max. mixed flow rate at 3 bar (l/m):** 81.5
- **Inlet connection type / length:** Fixed / 50 mm
- **Inlet (plumbing connection) / outlet size:** 1/2" M / n/a
- **Product flow characteristics:** Single flow

Non return valve(s) supplied or position: n/a

- **Aerator type:** Flow straightener
- **Control valve type:** 1/2" QT CD (8-20)
- **Includes output diverter?:** N/A
- **Inlet meshed particle filters included:** n/a
- **Shower hose type / length:** N/a / n/a

Warranty Summary (full details available on request):

- Materials and workmanship defects warranted for 5 years
- Valves and working parts warranted for 5 years
- Surface warranty defects warranted for 1 year
- O-rings, hoses & gaskets warranted for 1 year

Care instructions:

- Clean the mixers and showers regularly as required, using soap, do not use any other cleaners.
- Regular cleaning will prevent the build up of lime scale and dirt
- After cleaning rinse thoroughly with clean water to remove any cleaner residue
- Residues of liquid soaps, shampoos and shower foams can also cause damage, so rinse with clean water after using, avoid contact with any abrasives